ENGINE, STARTER - Z26SPD92AN/AH/BN/BH (C750279)

2026 RZR - RZR PRO S ULTIMATE (R01) - Z26SPD92AN/AH/BN/BH

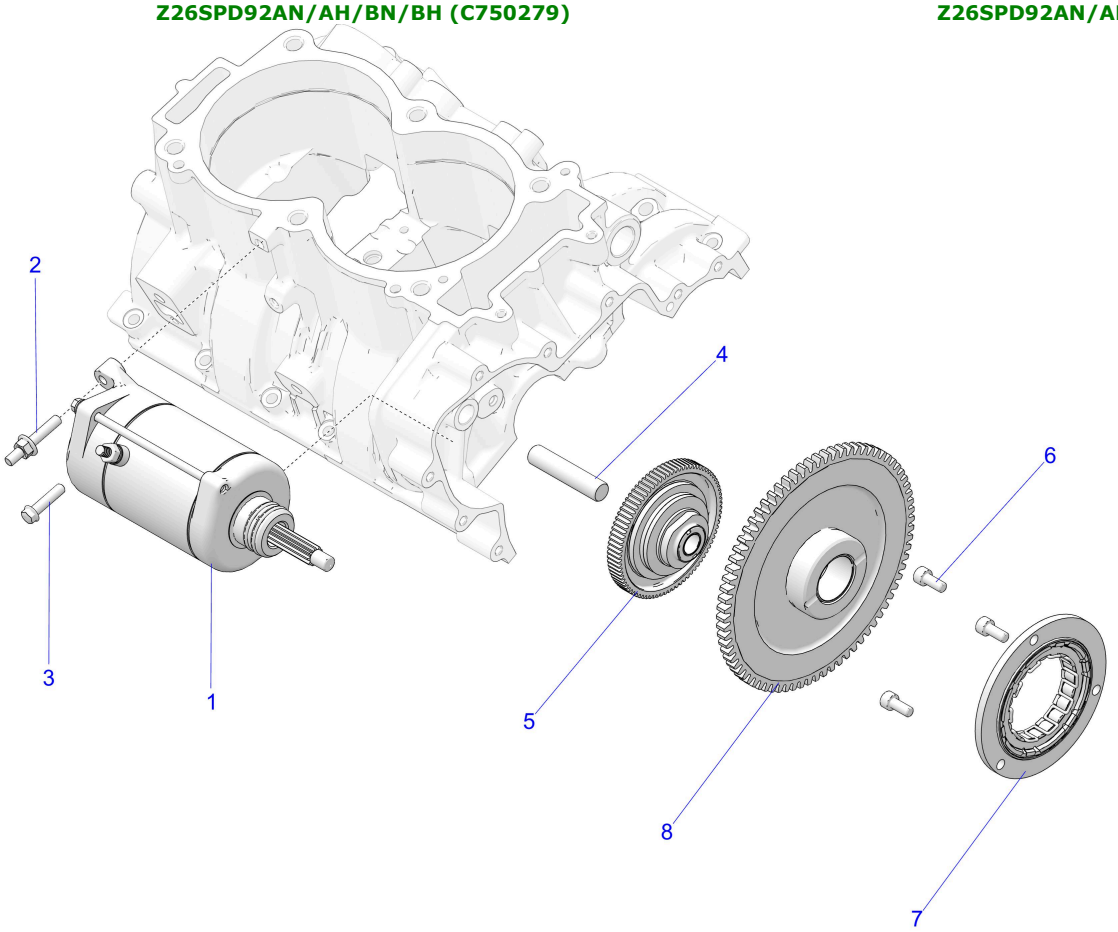

© 2023 Polaris Industries Inc. C750279

Reference #	*Part#*	*Description*	*Quantity*
1	4014548	STARTER-9T,CW	1
2	7519237	STUD-DOUBLE,END,M6X1.0X25/10	1
3	7519297	SCREW-HXFLG,M6X1.0X25,10.9	1
4	3022416	PIN-TQ,LIMIT,GEAR	1
5	3024038	ASM-TLG	1
6	7517431	SCREW-M6X1.0X14.0,HX/SOC/CP-Y/D	3
7	1205021	ASM., SPRAG CLUTCH, HUB, STARTER	1
8	1208774	ASM-GEAR,STARTER,CRANK	1

Copyright 1996-2026 Polaris Industries U.S.A All rights reserved.